QC	
INI	%
.	.
.	.

HEAT TRACE CABLE

UNIT	PIPE SIZE	PIPE LENGTH	RAYCHEM MODEL NO.	REGULATED TEMPERATURE	ELECTRICAL	NOTES
HTR 1	VARIES 1½"-6"	40	5XL-1-CR	40°F	120V/1ϕ 0.08 AMPS/FT	INSTALL ON ALL ABOVE GROUND PIPE AND PUMP CASINGS.

SITE WATER BOOSTER EQUIPMENT

UNIT	DESCRIPTION
BP 1	WATER PRESSURE BOOSTER PUMPS: TRIPLE PUMP, OUTDOOR INSTALLATION, SKID MOUNTED, BELL & GOSSETT SERIES 70M SYSTEM OR APPROVED EQUAL. THE ENTIRE SYSTEM SHALL BE UL LISTED. SYSTEM SHALL BE CAPABLE OF PROVIDING 60 PSI DISCHARGE PRESSURE WHEN SUPPLIED WITH 30 PSI SUCTION PRESSURE. PUMPS SIZES ARE BASED UPON THE 30 PSI BOOST PLUS 9 FT HEAD LOSS THROUGH THE PACKAGE. PUMPS SHALL BE CLOSE COUPLED, BASE MOUNTED, BRONZE FITTED, SUITABLE FOR DOMESTIC WATER SERVICE, EQUIVALENT TO BELL & GOSSETT SERIES 1531. MOTOR SIZES' SHALL BE SELECTED TO BE "NON-OVERLOADING". LEAD PUMP: 50 GPM, 80 FT OF HEAD, 3 HP, 1750 RPM, 52% MIN PUMP EFFICIENCY. TWO LAG PUMPS: 500 GPM EACH, 80 FT OF HEAD, 20 HP, 1750 RPM, 77% MIN PUMP EFFICIENCY. PROVIDE SHUT-OFF VALVES AND UNIONS/FLANGES ON THE SUCTION AND DISCHARGE OF EACH PUMP. PROVIDE A "CLA-VAL" COMBINATION PRESSURE REDUCING VALVE/CHECK AT DISCHARGE OF EACH PUMP. ACCESSORIES SHALL BE LINE SIZE (4"ϕ FOR LARGE PUMPS AND 1 1/2" ϕ FOR SMALL PUMP). PROVIDE 6" ϕ SUCTION AND DISCHARGE MANIFOLDS. PROVIDE PRESSURE GAGES ON THE SUCTION AND DISCHARGE MANIFOLDS. ELECTRICAL: MOTORS SHALL BE 460 V, 3 ϕ, TEFC TYPES. SMALL PUMP MOTOR SHALL BE "PREMIUM" NEMA EFFICIENCY. PANEL SHALL BE NEMA 3R. PANEL SHALL INCLUDE MAIN DISCONNECT, INDIVIDUAL MOTOR CIRCUIT PROTECTORS, MOTOR STARTERS WITH OLS, HOA SWITCHES, INDICATOR LIGHTS ("RUN", POWER-ON", AND "FAULT"), AND CONTROLS LISTED BELOW. CONTROLS: PROVIDE 120 V FUSED CONTROL CIRCUIT, ADJUSTABLE PRESSURE SWITCH FOR AUTO START, CURRENT SENSOR STAGING CONTROLS, AUTO ALTERNATION OF LAG PUMPS, "NO-FLOW" SHUT-DOWN, MIN RUN TIMERS, AND A THERMAL SAFETY PURGE VALVE. SYSTEM SHALL BE PRE-ASSEMBLED ONTO A STRUCTURAL STEEL FRAME AND SHALL BE PIPED, WIRED, TESTED, CLEANED, AND PAINTED. SYSTEM CHECK AND START-UP SHALL BE PERFORMED BY MANUFACTURER OR MANUFACTURER'S DESIGNATED REPRESENTATIVE. PROVIDE "MASON" SFDEJ FLEX CONNECTORS ON THE INLET AND OUTLET MAINFOLD. PROVIDE "MASON" MD NEOPRENE MOUNTS ON BASE. OPERATING WEIGHT: 2400 LBS.
T 1	HYDRO-PNEUMATIC TANK, "WESSELS" FX 300V OR APPROVED EQUAL 80 GALLON, PRECHARGED, WITH REPLACEABLE HEAVY DUTY BUTYL (FDA APPROVED) DIAPHRAGM, SELF-STANDING, AND FINISHED FOR OUTDOOR INSTALLATION OPERATING WEIGHT: 900 LBS.

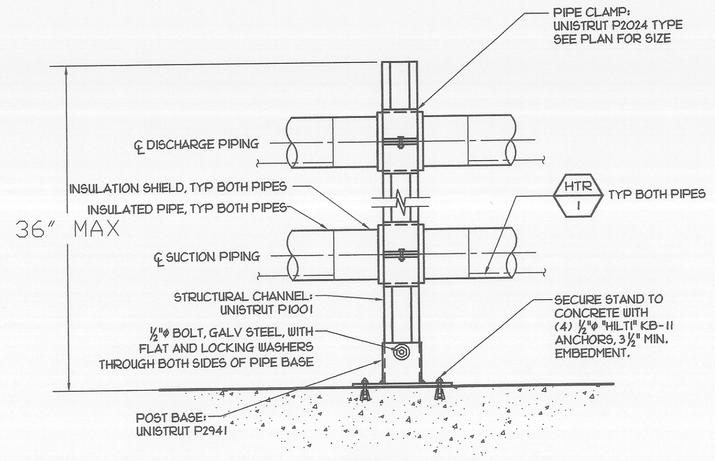

NOTE:
LOCATE PIPE SUPPORT AS CLOSE TO THE MAIN SHUT-OFF VALVES AND BYPASS AS POSSIBLE.

PIPE SUPPORT

SCALE : NONE

3 / P0.1

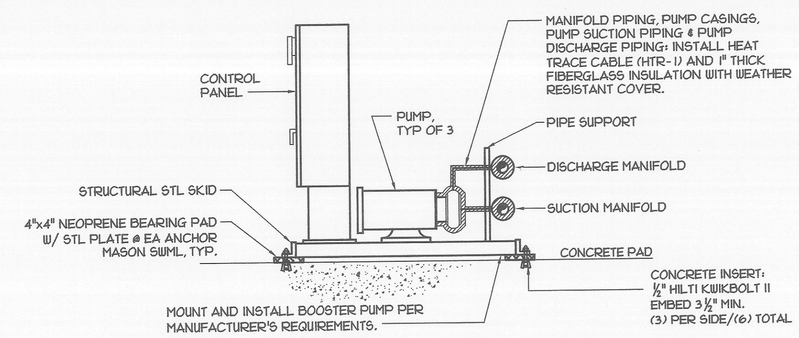

WATER BOOSTER PUMP MOUNTING

SCALE : NONE

1 / P0.1

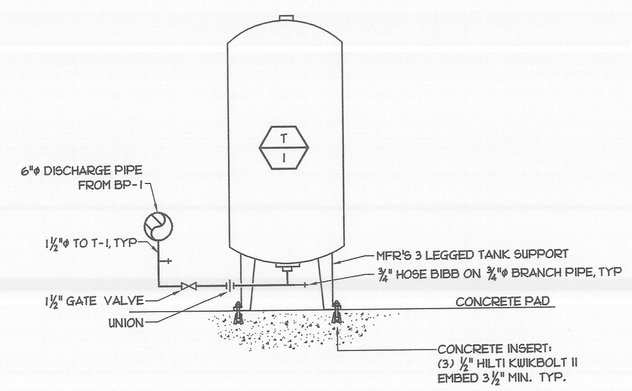

TANK PIPING AND MOUNTING

SCALE : NONE

2 / P0.1

DREYFUSS & BLACKFORD
ARCHITECTS
3540 POLSOM BOULEVARD
SACRAMENTO, CALIFORNIA
95816
TELEPHONE 916 453-1334
FACSIMILE 916 453-1336

CAPITAL ENGINEERING CONSULTANTS, INC.
SACRAMENTO, CALIFORNIA
SZ/NAB — DESIGNED/DRAFTED
03301.00 — PROJECT NO.

REGISTERED PROFESSIONAL ENGINEER — JOHN LIONAKIS — M 24788 — EXPIRES 12/31/05 — MECHANICAL — STATE OF CALIFORNIA

DATE SIGNED: 1/31/5

CONSTRUCTION DOCUMENTS
BID SET

THIS DRAWING IS NOT FINAL OR TO BE USED FOR CONSTRUCTION UNTIL IT IS SIGNED BY THE ARCHITECT/ENGINEER

	REVISION	BY	DATE
1	.	.	.
2	.	.	.
3	.	.	.
4	.	.	.
5	.	.	.
6	.	.	.

SAN JOAQUIN COUNTY
VA/HOSPITAL DIALYSIS
CLINIC SITE PACKAGE

SITE PLUMBING
SCHEDULE

A3720.01

02 FEBRUARY 2005

P0.1

SITE BOOSTER\VA-LTBE - January 31, 2005 - HB - 20